MY DESIGN PORTFOLIO

JOE BREEN

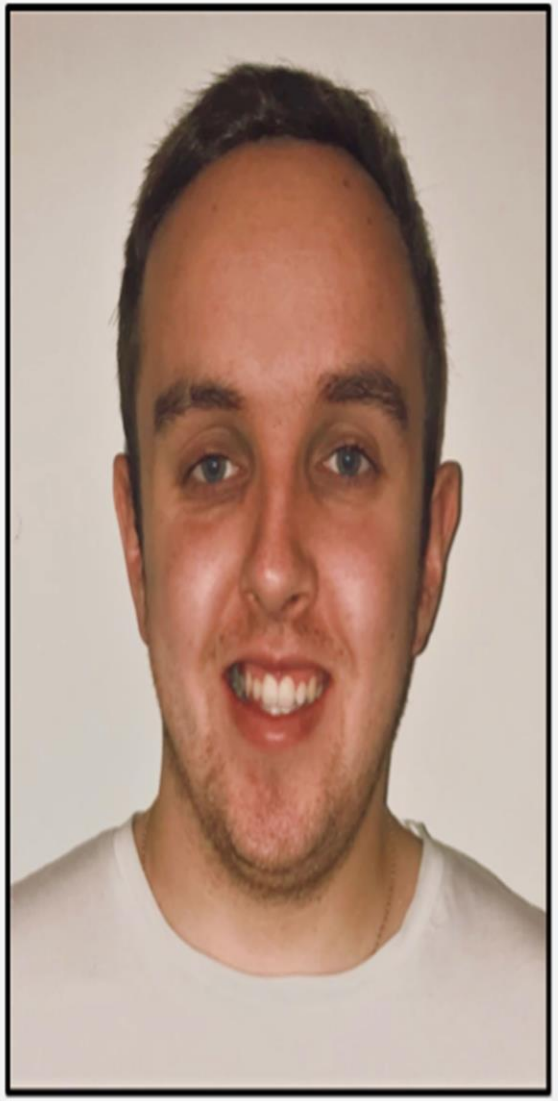

Hello, my name is Joe Breen

From a very young age I have always had a passion for art, designing and creating. I find great joy and satisfaction in designing and creating something new and unique. I chose to study the course 'Product Design and Technology' because it enables me to carry on pursuing my passion for designing and creating. In my opinion, Product Design has given me new resources and tools to improve my creative passion.

Skills

Interests

087 357 0643 joebreen99@gmail.com

18233694@studentmail.ul.ie

PROJECTS

DESIGN VISUALISATION – VISUAL STORYTELLING

p4-5

DELL COMPUTER MONITOR

p6-12

LIT! LAMP PROJECT

p13-16

STIRLING ENGINE PROJECT

p17-22

OTHER SOLIDWORKS WORK

p23-24

DESIGN VISUALISATION – VISUAL STORYTELLING

Select a product that has interesting FUNCTIONALITY and USABILITY properties.

Examine the product and create a list of the product's features and why they exist.

Sony MDR-XB950B1 Wireless NFC On-Ear Bluetooth Headphones

Different colour variations

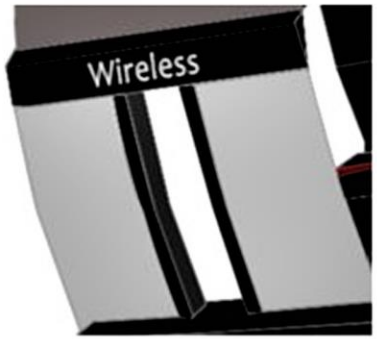

Adjustable sizing

Rotatable earpieces

Can be easily stored

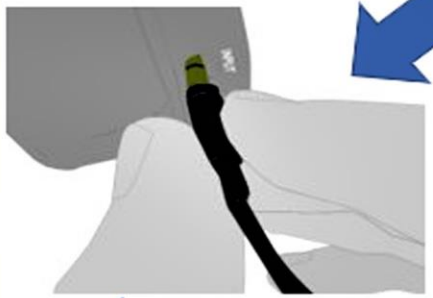

Removable audio cable – can be used without Bluetooth

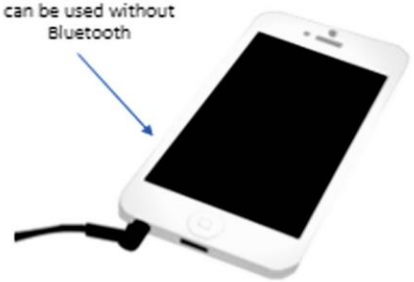

Power Button

Good LED indicator lights

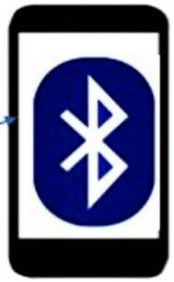

Bluetooth setting

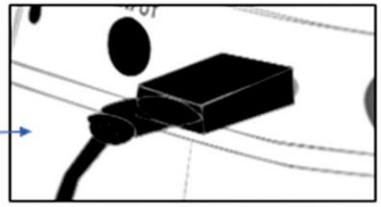

Rechargeable headphones

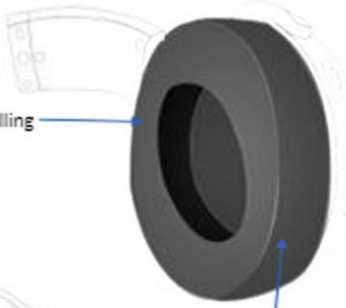

Noise cancelling

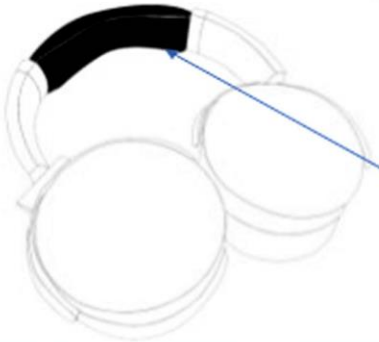

Foam material for comfortable use

Joe Breen - 18233694

DELL COMPUTER MONITOR

Make a 1:2 scale model of a Dell Computer Monitor.

Measuring all the parts of the monitor and half them.

Use the materials provided (in this case, Kingspan foam, urethane and foam-x)

BASE

METHOD

1) Draw the base layout as shown.
2) Cut out the base layout and stick it onto a flat piece of FOAM-X
3) Cut out the base layout on the FOAM-X using a bandsaw, then use a file and sandpaper to smoothen the sides
4) Measure back 5mm on the top and side of the 2 rectangular parts of the base and draw an arc joining those 2 points on the sides.
5) Use a file to remove the area near the arc until you're left with just the arcs at the ends.
6) Finally, smoothen both arcs with sandpaper

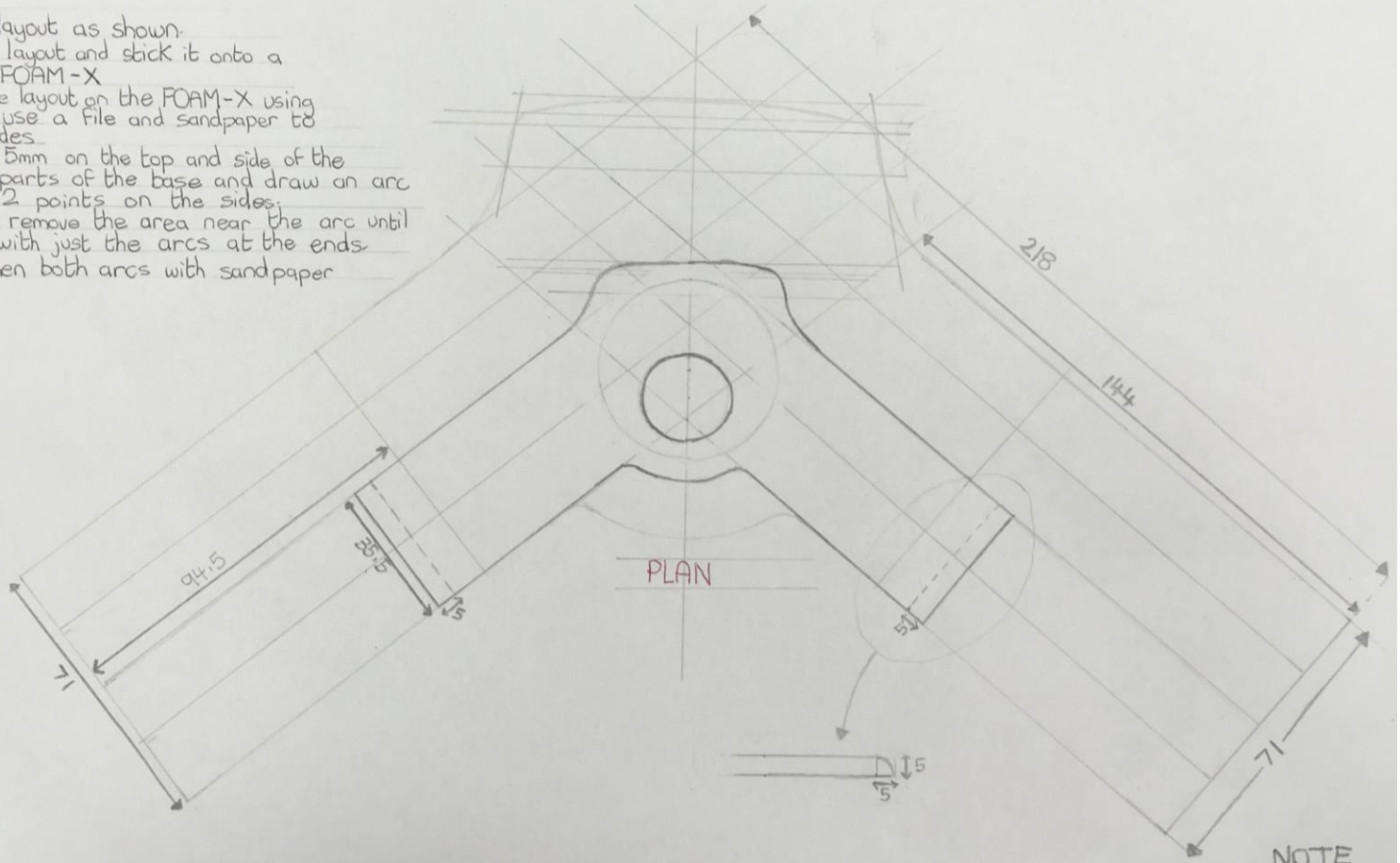

PLAN

NOTE
71 = 71mm

STAND SUPPORT PIECE

METHOD

1) Draw the stand support end-view layout as shown or trace the stand support and half the measurements to get the piece required.
2) Mark all measurements on a flat piece of FOAM-X as shown and cut out shape using a bandsaw if necessary.
3) Draw lines on the piece to mark where the piece needs to be bended. Use a hot wire strip heater to slightly dissolve the material where it needs to be bended.
4) After being placed on the strip heater for 10-20 seconds, bend piece to angle required.
5) On lower part, an area of 30mm x 10.5mm needs to be hollow. Drill a hole in this area and then place the bandsaw blade into the hole and cut out the rest of hole. Finally, use a file and sandpaper to smoothen the inside.

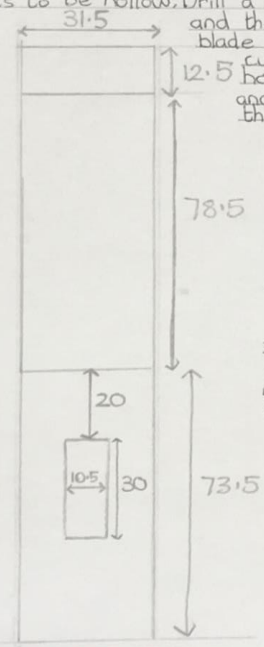

ELEVATION

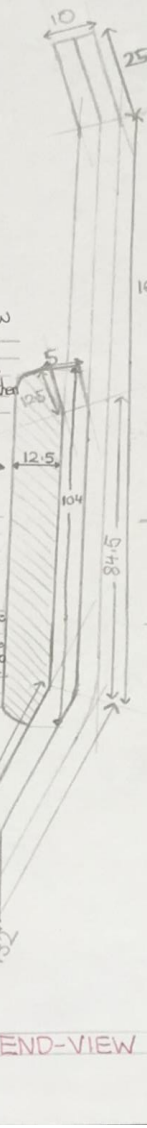

END-VIEW

SLIDER

METHOD

1) Cut out a piece of urethane 104mm long and 31mm wide.
2) Use the stand support to mark out the back of the piece to cut out so it fits into the stand support piece.
3) File off the back piece until it fits perfectly into the stand support piece.
4) Use a file to fillet the front of the slider.

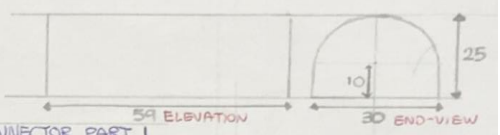

CONNECTOR PART 1

METHOD

1) Cut out a rectangle of urethane with the measurements shown using a band saw.
2) Use a file and sandpaper to curve the sides.

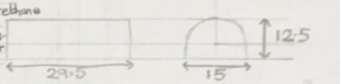

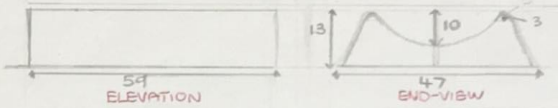

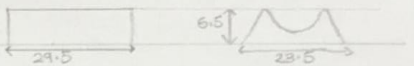

CONNECTOR PART 2

METHOD

1) Cut out a rectangle of urethane with the measurements shown using a bandsaw.
2) Find the centrepoint on the top surface and draw an arc 5mm long.
3) Measure 3mm out from the arc and then draw a line from that point to the bottom.
4) At the 3mm parts, turn it into a semicircle of 1.5mm radius.
5) Finally, cut out the arc and smoothen.

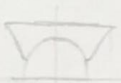

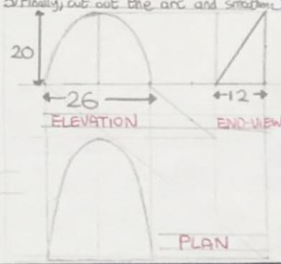

STAND SUPPORT SUPPORT PIECE

METHOD

1) Make a cylinder 26mm diameter and 20mm height out of urethane.
2) Find the angle of the stand support piece and mark it on the cylinder.
3) Finally, use the bandsaw to cut along the line until you're left with the piece needed.

NOTE

20 = 20mm

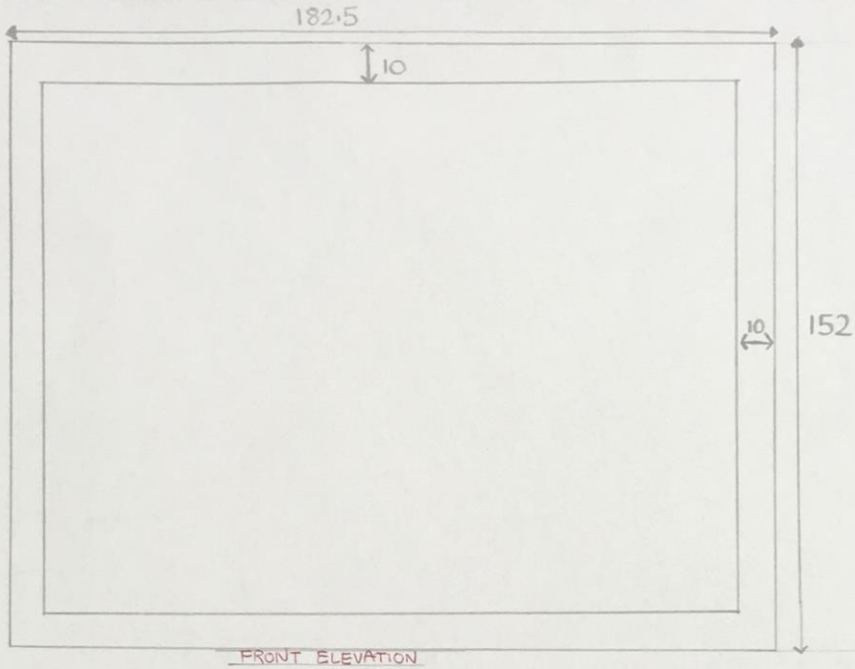

FRONT ELEVATION

END-VIEW

SCREEN

METHOD

1) Take a block of Kingspan foam. Make sure it is the right size. If not, mark out the measurements and use the bandsaw.
2) On the back, find the centrepoint using diagonal lines, then draw a box 61mm x 61mm.
3) Measure 37.5mm from the top and bottom and draw lines that touch the diagonal lines to make another box.
4) On the sides, measure 12mm from the front and mark the lines all around the board.
5) Continue the lines on the back to the edges and mark these points and join them to the edges of the 12mm lines.
6) Use the bandsaw to cut these lines on the sides so it is back diagonally.
7) Looking at the 4 diagonal sides, pick the bottom side and use a scalpel to cut out this part so it is hollow. Cut it out down as far as the 12mm line. Afterwards, use sandpaper to smoothen the cut out area.
8) On the front face, measure 10mm from each side inwards to mark out the screen lines.
9) Afterwards, use the computer monitor to mark in any details e.g DELL lettering, lines on the back, computer buttons.

NOTE

10 = 10mm

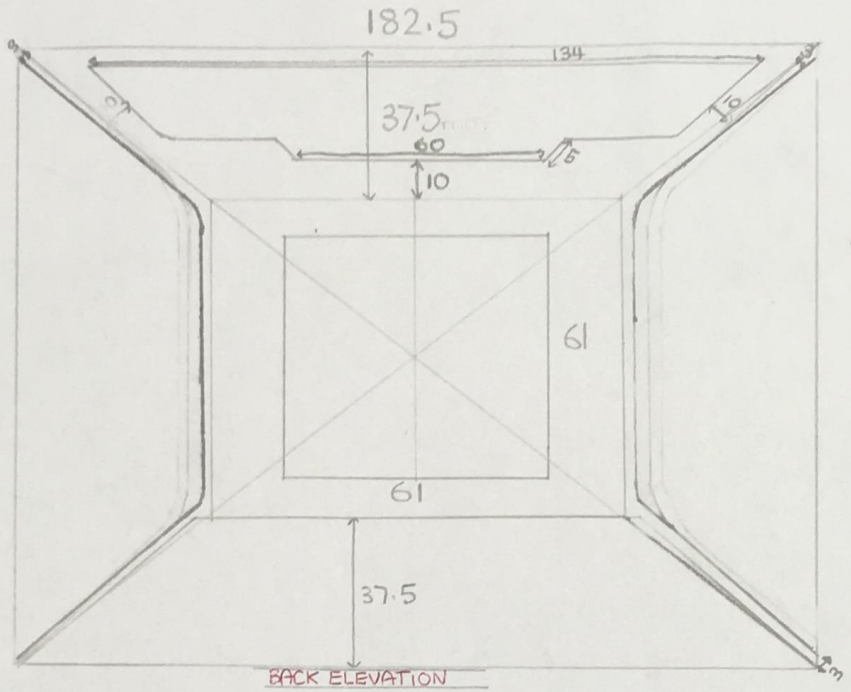

152

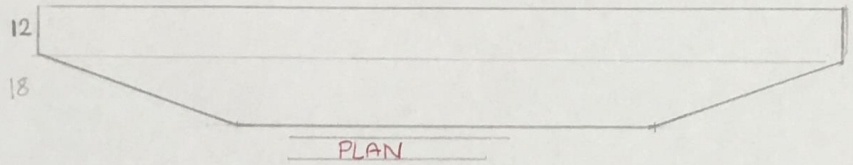

NOTE
12 = 12mm

DELL

DELL

DELL

LIT!

Design and build a fully functioning light fixture for one of the following purposes: Accenting, Ambiance or Task.

STIRLING ENGINE PROJECT

Model the Stirling engine parts accurately from the dimension guide.

Assemble SolidWorks parts into an assembly.

Render photorealistic images from the assembly.

Animate the Stirling engine exploded view.

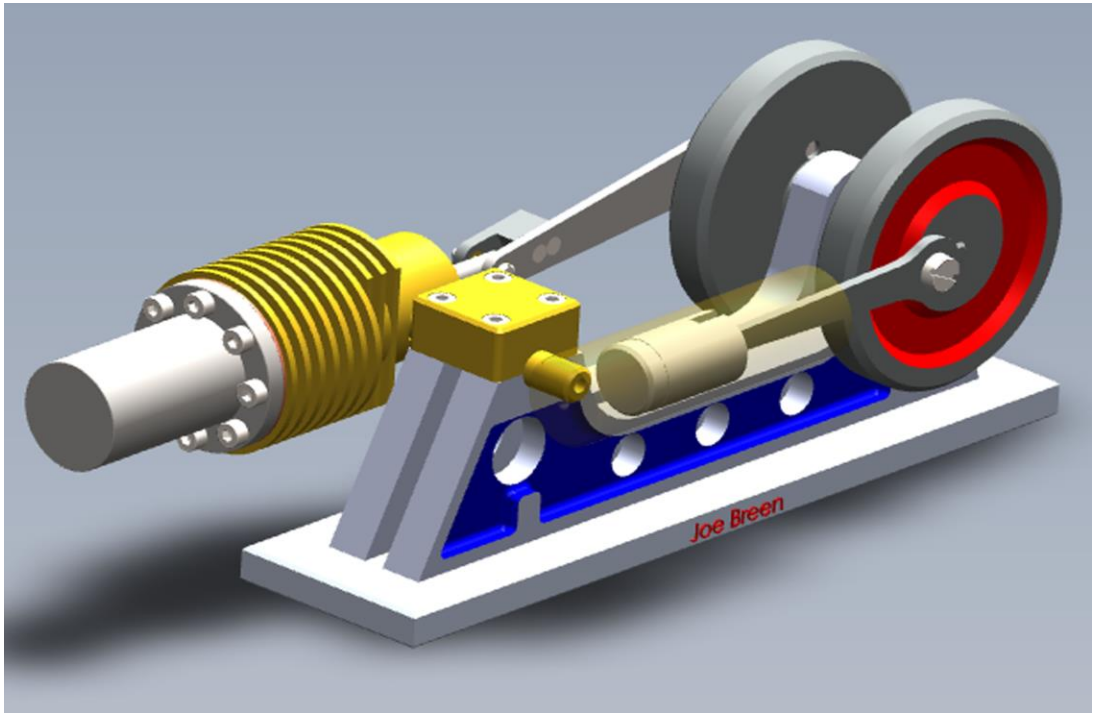

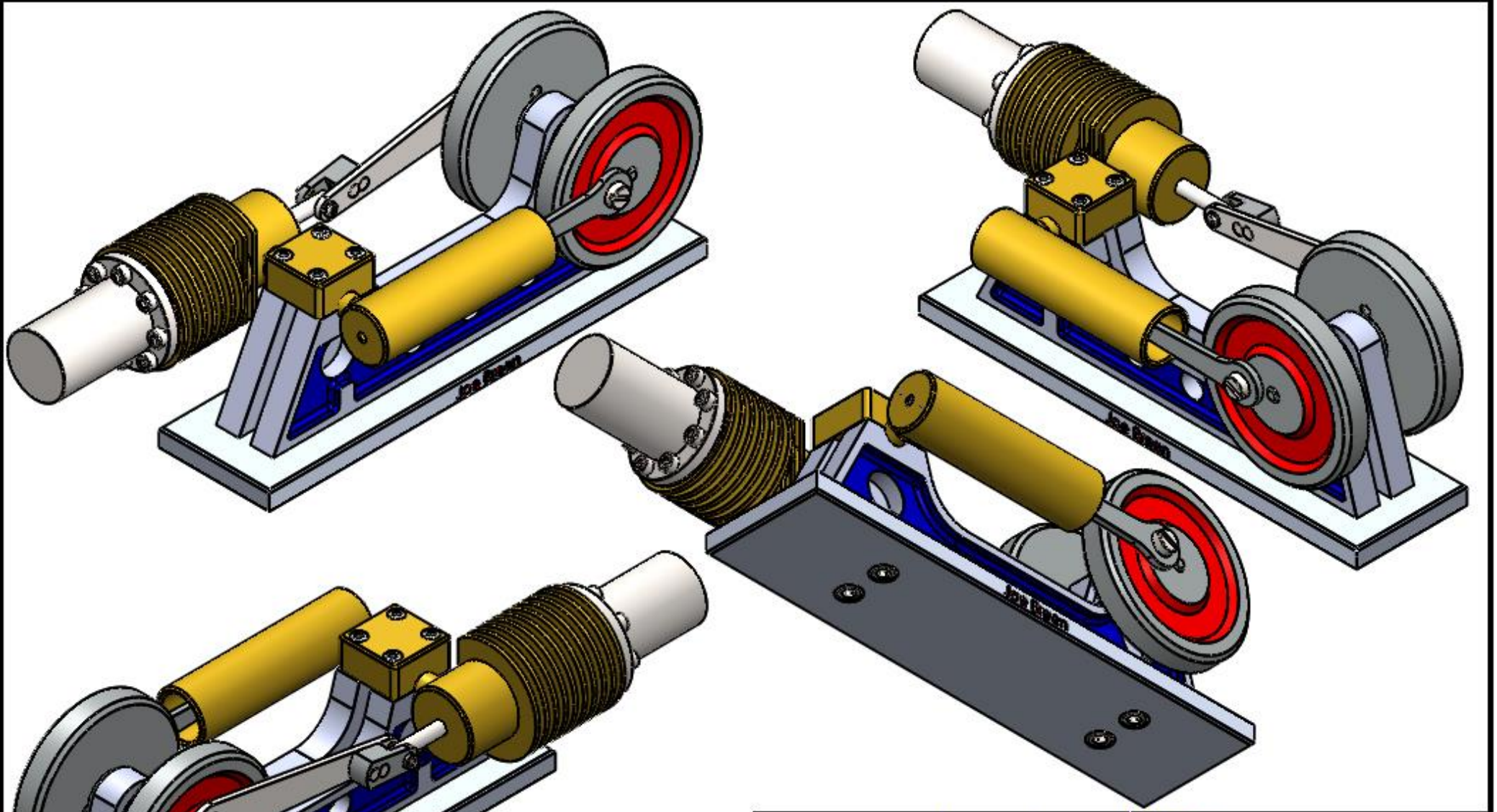

Unless otherwise specified dimensions are in millimetres. Tolerances are: XXX [0 PLS] ±0.5 MM XX [1 PLS] ±0.1 MM X [2 PLS] ±0.03 MM .XXX [3 PLS] ±0.007 MM UNLESS OTHERWISE NOTED. ANGLE TOLERANCE ±0°30' UNLESS NOTED	Name	Date	SIZE A4	UNIVERSITY OF LIMERICK OLLSCOIL LUIMNIGH
	Drawn Joe Breen	30/09/2020		
	Checked		Title: STIRLING ENGINE PROJECT	
	DO NOT SCALE DRAWING			
	THIRD ANGLE PROJECTION			
Sheet Name: ISO_Views	DWG NO	Material	Weight: 0	
	RTV	Scale: 1:2	Sheet 1 of 18	

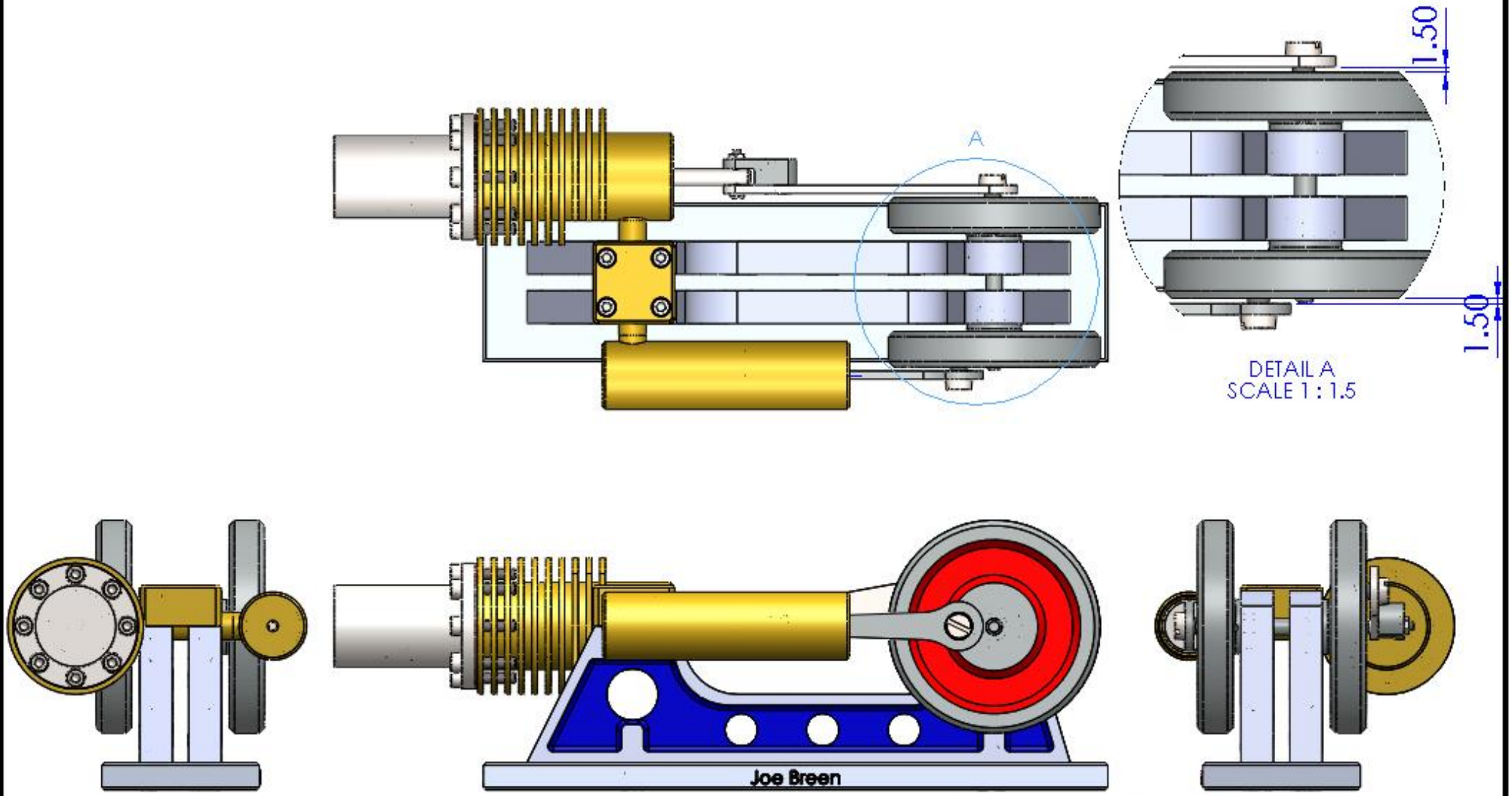

Unless otherwise specified dimensions are in millimetres. Tolerances are: XXX (0 PLS) ±0.5 MM XXX (1 PLS) ±0.1 MM XXX (2 PLS) ±0.03 MM XXX (3 PLS) ±0.007 MM UNLESS OTHERWISE NOTED ANGLE TOLERANCE ±0°30' UNLESS NOTED	Name	Date	SIZE A4	UNIVERSITY OF LIMERICK OLLSCOIL LUIMNIGH
	Drawn Joe Breen	30/09/2020		
	Checked		Title:	
	DO NOT SCALE DRAWING		STIRLING ENGINE PROJECT	
	THIRD ANGLE PROJECTION			
Sheet Name: Assy_Ortho			DWG NO	Material / Weight: g
			REV	Scale: 1:2 / Sheet 2 of 18

ITEM NO.	PART NUMBER	MATERIAL	QTY.
1	BASE PLATE	1060 Alloy	1
2	LEFT SIDE FRAME	1060 Alloy	1
3	RIGHT SIDE FRAME	1060 Alloy	1
4	DISPLACER CON-ROD ASSEMBLY		1
4.1	DISPLACEMENT PISTON BODY	Plain Carbon Steel	1
4.2	DISPLACEMENT PISTON CAP	Plain Carbon Steel	1
4.3	DISPLACEMENT PISTON SHAFT	Plain Carbon Steel	1
5	DISPLACER CON-ROD ASSEMBLY		1
5.1	DISPLACER CON-ROD	Plain Carbon Steel	1
5.2	CON-ROD CLAMP	Plain Carbon Steel	1
5.3	BIG END BUSH	Brass	1
5.4	SMALL END BUSH	Brass	2
5.5	3 X 16 DIN 661 COUNTERSUNK RIVET - TYPE B		2
6	POWER CON-ROD ASSEMBLY		1
6.1	POWER CON-ROD	Plain Carbon Steel	1
6.2	BIG END BUSH	Brass	1
6.3	SMALL END BUSH	Brass	1
7	CROSS CYLINDER SUPPORT PIPE	Brass	1
8	CROSS CYLINDER SUPPORT	Brass	1
9	POWER PISTON	Plain Carbon Steel	1
10	FLYWHEEL	Plain Carbon Steel	2
11	FLYWHEEL SHAFT	Plain Carbon Steel	1
12	GASKET	Copper	1
13	COLD CYLINDER	Brass	1
14	HOT CYLINDER	Plain Carbon Steel	1
15	POWER CYLINDER	Brass	1
16	PRECISION BALL BEARING 20 619		2
17	M8 X 10 PARALLEL PIN		1
18	M4 X 16 SOCKET HEAD CAP SCREW		4
19	M6 X 16 SLOTTED CHEESE HEAD SCREW		2
20	M4 X 20 SOCKET HEAD CAP SCREW		8
21	M8 X 16 SLOTTED PAN HEAD SCREW		1
22	M8 HEX THIN NUT		1
23	M4 X 10 SOCKET GRUB SCREW CONE POINT		2
24	M6 X 10 SOCKET HEAD CAP SCREW		4

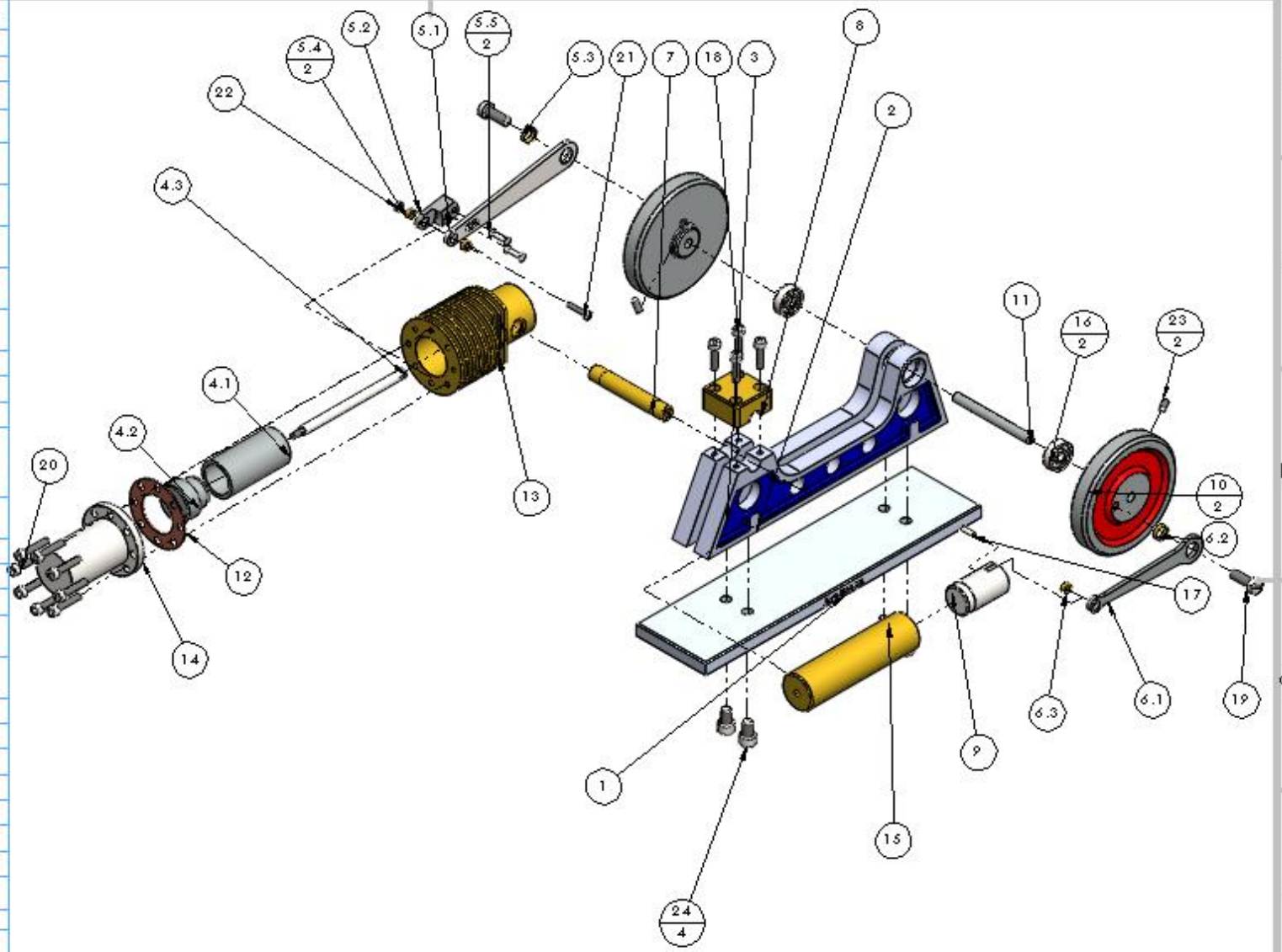

Unless otherwise specified dimensions are in millimetres.
Tolerances are:

Sheet Name:
Exploded View

THIRD ANGLE PROJECTION

SIZE A3

UNIVERSITY OF LIMERICK

Title:
STIRLING ENGINE PROJECT

Scale: 1:2.5

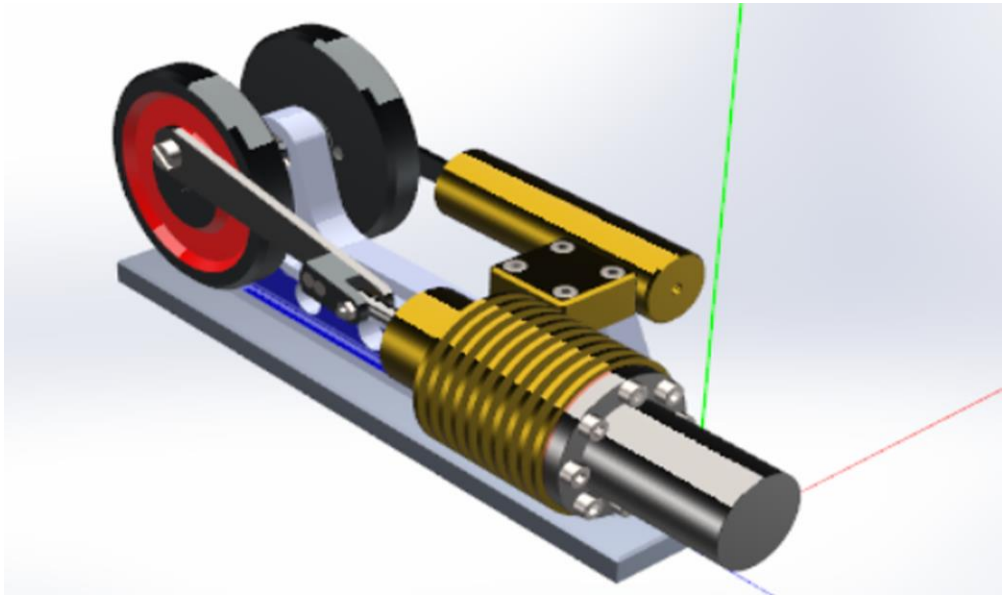

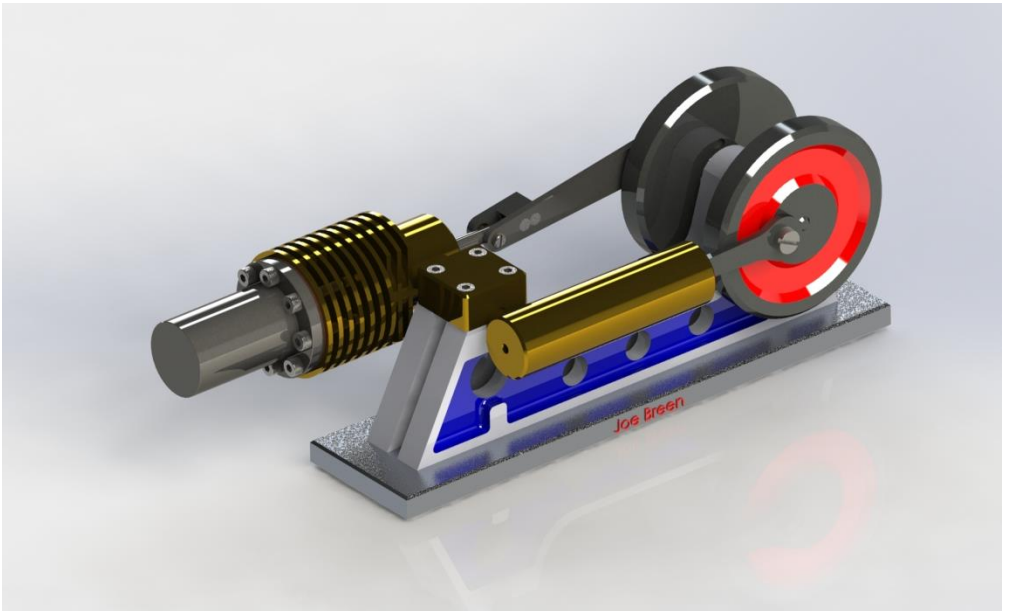
Joe Breen

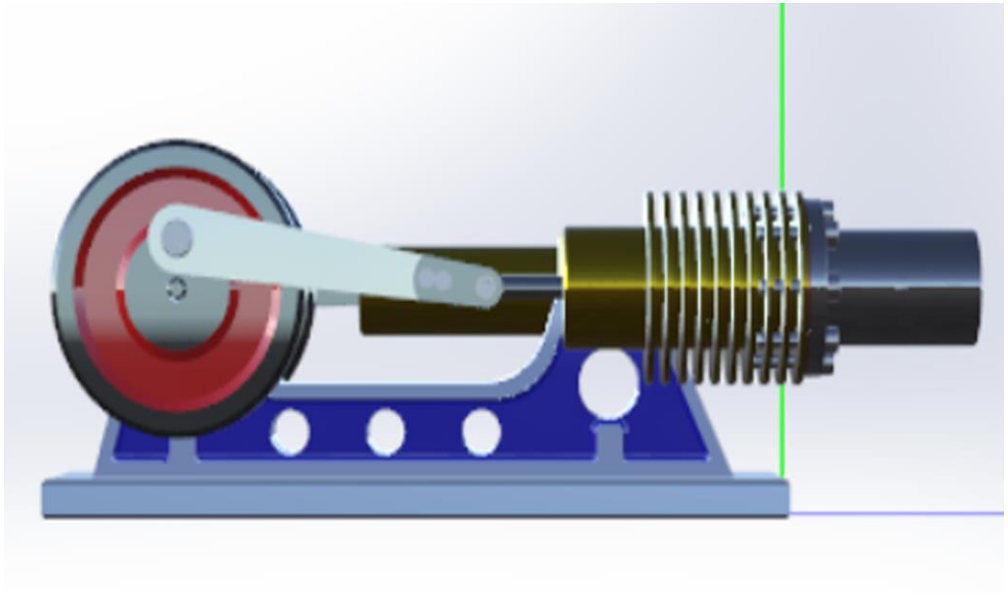

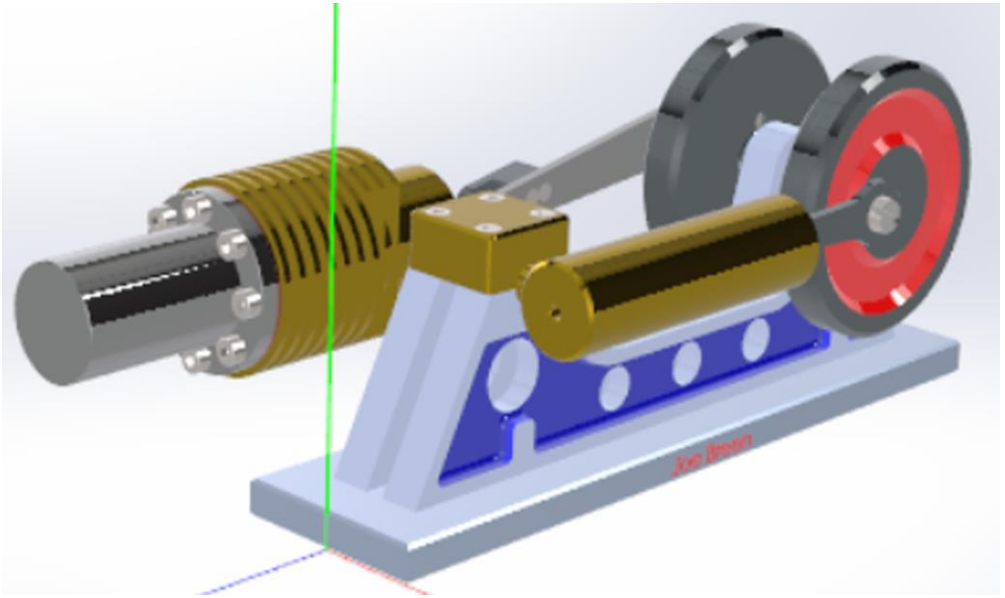
Joe Breen

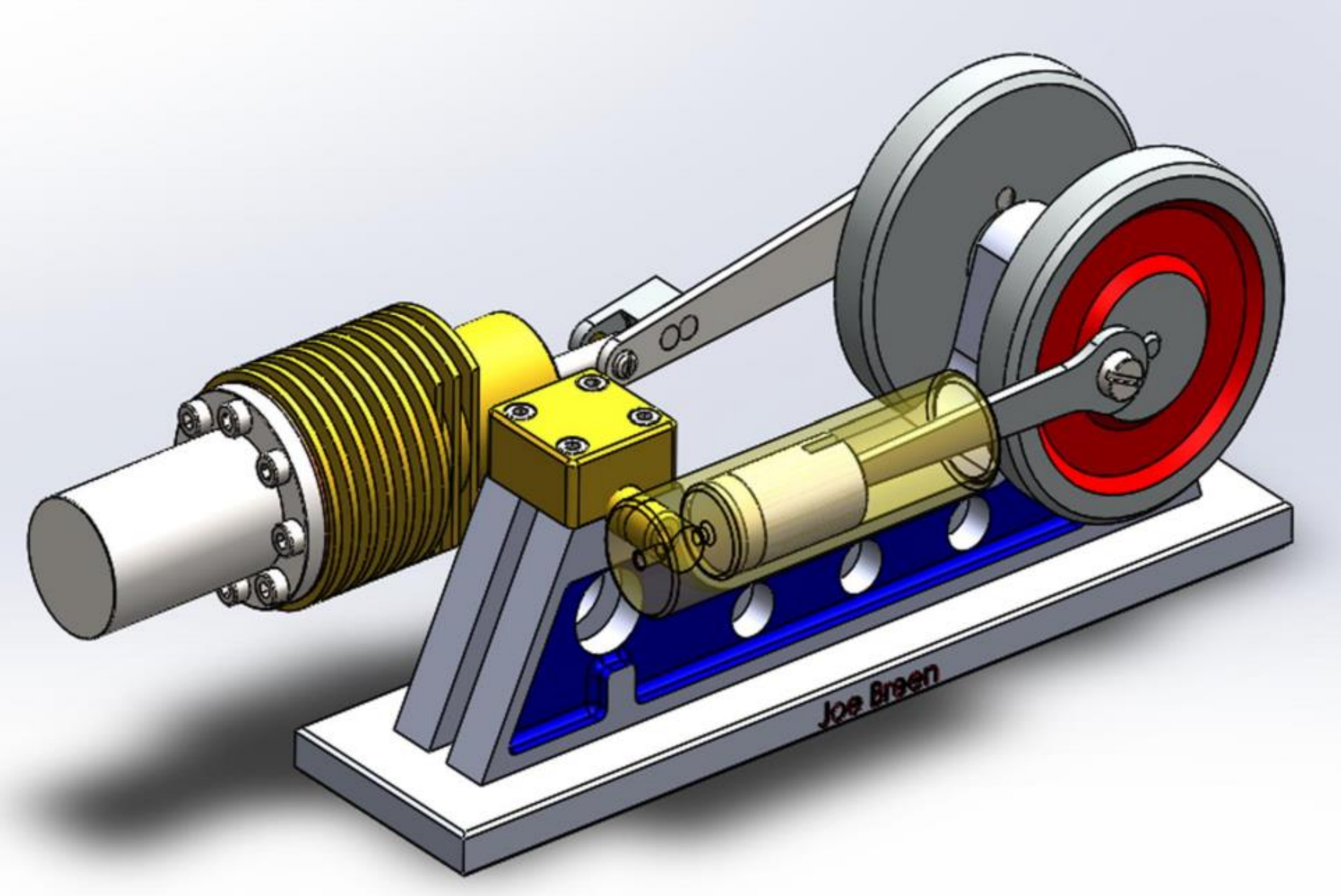

Animation Video Link: https://youtu.be/Ujzpo6M5Mpo

OTHER SOLIDWORKS WORK

TAP

CUP

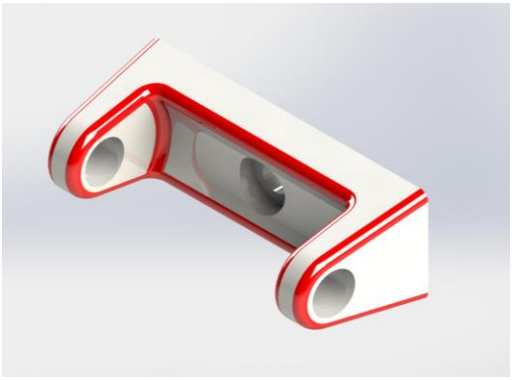

BRACKET

DOOR HANDLE

WINE GLASS

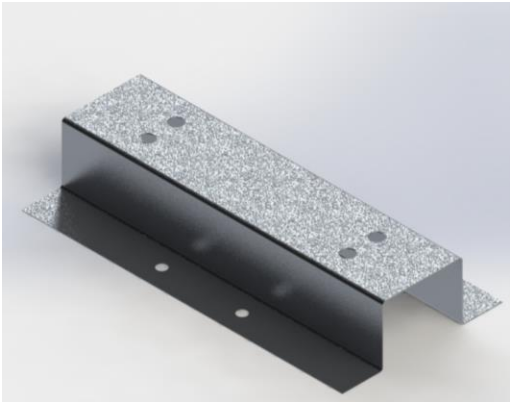

SHEET METAL TOP HAT

ROLLER SUPPORT

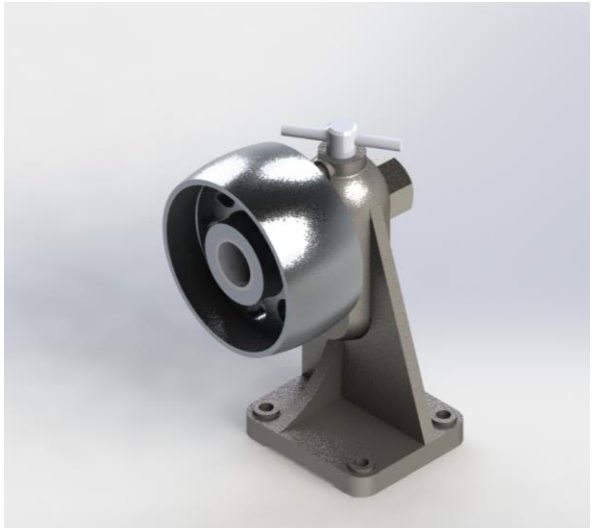

BELT TENSIONER

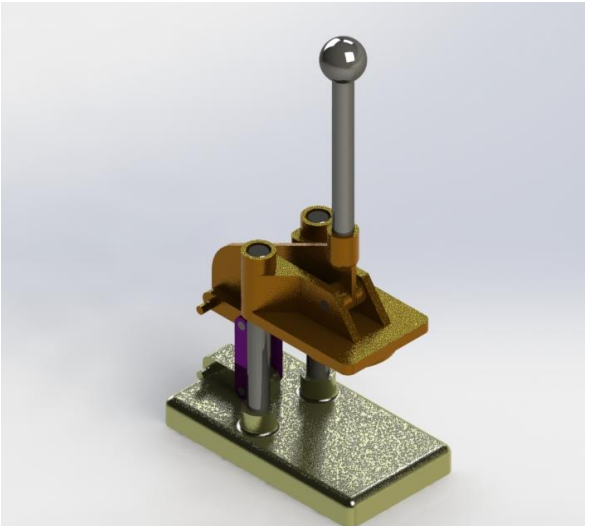

CAN CRUSHER

CAR JACK

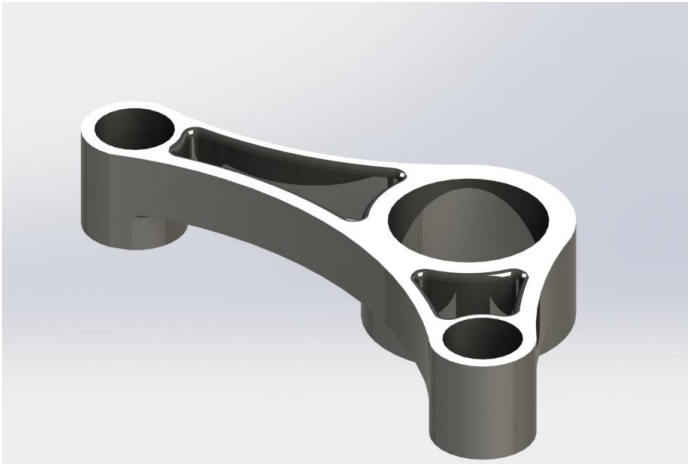

PIVOT CRANK